# Part Number: D3I4080YMG-77K

## Electrical Specifications

| | | |
|---|---|---|
| Frequency Range (GHz): | 4.0 – 8.0 | |
| Isolation (dB): | 20 | MIN |
| Insertion Loss (dB): | 0.3 | MAX |
| Return Loss (dB): | 20 | MIN |
| Forward Power (W): | 30 | AVG |
| | 50 | PK |
| Reflective Power (W): | 2 | AVG |

## Mechanical/Environmental Specifications

| | |
|---|---|
| Connector Type: | SMA |
| Connector Body: | Passivated stainless steel |
| Connector Pin: | Gold plated copper |
| Load Body: | Brass |
| Magnetic Shunt: | Nickel plated CRS |
| Magnetically Shielded: | Yes |
| Optimized Temperature: | < 77K |
| Weight (oz) | 2.0 MAX |

## D3I4080YMG-77K-2 Dimensions

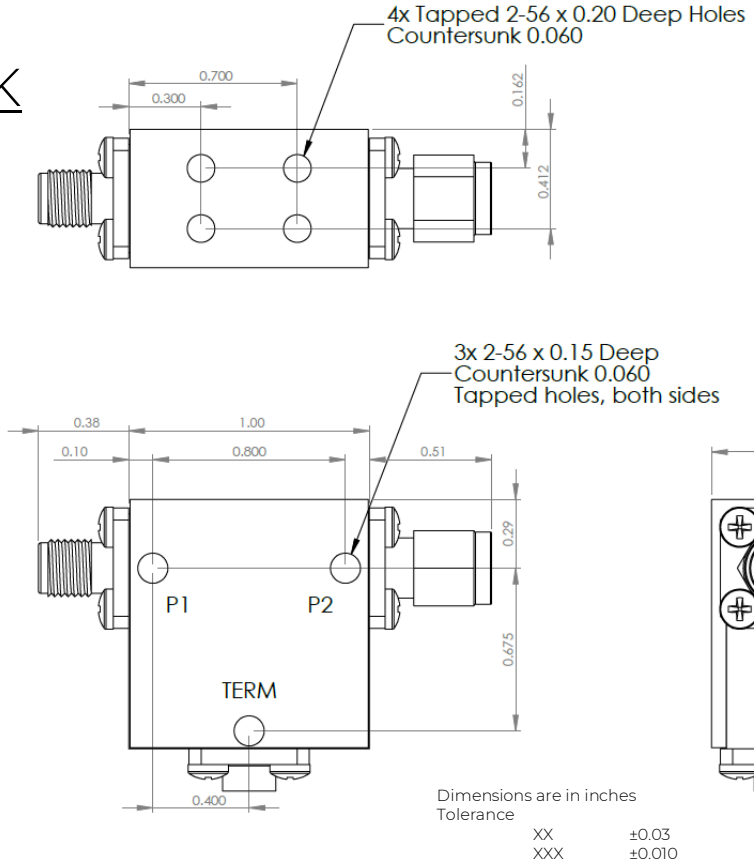


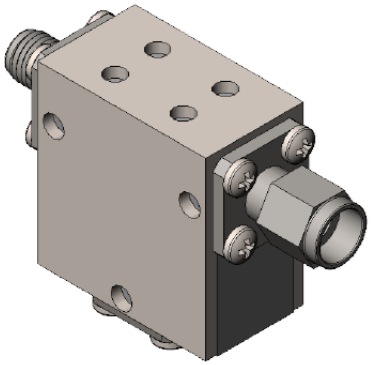

| Type of Device | PN Suffix | Connector Configuration Port 1 / Port 2 | PN Example |
|---|---|---|---|
| Single and Dual Junction Isolator, 2-Port Device<br>Port 1 / Port 2 | N/A | Female / Female | D3I4080YMG-77K |
| | -1 | Male / Female | D3I4080YMG-77K-1 |
| | -2 | Female / Male | D3I4080YMG-77K-2 |
| | -3 | Male / Male | D3I4080YMG-77K-3 |

DiTom Microwave · 7592 N Maroa Ave Fresno, CA USA · PH +001-559-255-7042 · FAX +001-559-255-1667

DiTom MICROWAVE INC.

# MEASURED DATA

Part Number: D3I4080YMG-77K, Measured at 77K

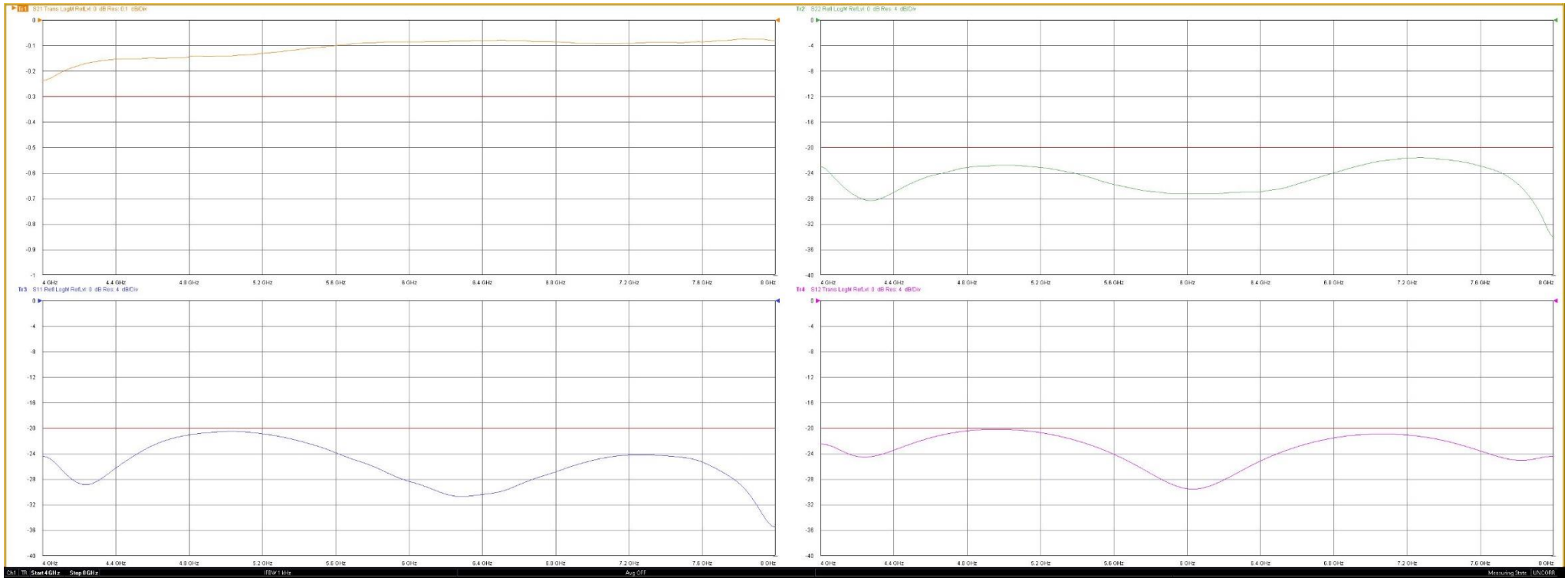


DiTom Microwave • 7592 N Maroa Ave Fresno, CA USA • PH +001-559-255-7042 • FAX +001-559-255-1667